HWAM
intelligent heat

IN1212 Installation
IN1200 Operating and Maintenance Instructions

30/45
30/55
30/65
20/80

Wood Models

This manual must be used in conjunction with document

IN1173 The Wood and Mutlifuel Chimney and Installation Guide,

This Manual Must Always Be Available To The Stove Operator

Part No.

Model Name

Serial Number

Euroheat
Natural Energy Company

Contents

Operating Instructions

Installation Instructions

Automatic

IMPORTANT

Since April 2002 only Registered Competent Engineers may install solid fuel fired appliances without involving the Local Authority Building Control Department. For more details contact HETAS. Euroheat would suggest only Registered Competent Engineers such as HETAS approved engineers install Euroheat appliances. If a competent approved engineer is not employed to install your appliance building control must to contacted and a building control number is issued.

■ The installation of this appliance must comply with all local regulations, including those referring to national and European Standards before it can be operated. The stove is not suitable for a shared flue.

■ Improper adjustment, alteration, maintenance or the fitting of replacement parts not recommended by the manufacturer can cause injury or property damage. Do not operate the stove with faulty seals or damaged glass.

■ Ensure all manuals are kept safely and are available for the user at all times.

■ Do not store or use petrol or other flammable vapours and liquids in the vicinity of this or any other heating appliance. Do not use aerosol sprays near the stove when the stove is alight. Do not burn anything but natural wood or approved coals on this appliance.

■ Due to high operating temperatures of this appliance it should be located away from pedestrian traffic and away from furniture and draperies. Do not store paper or wood near the appliance. Any mats and rugs put in front of the stove should be fire proof and secured to prevent the possibility of tripping.

■ Advise all persons as to the stove's high surface temperatures, including visitors. If it is possible for children or infirm adults to come into contact with the stove, fit a suitable fire guard. Never let children "help" with the stove in any way, even when the stove is cold. The glove supplied with the stove MUST always be worn when opening the door handle and loading fuel onto the stove.

■ It is imperative that all air passageways into, out of, and within the appliance are kept clean. All permanent ventilation into the room provided for the stove must remain clear and unobstructed at all times. Consideration must be given to the need for extra ventilation if another heating source needing air is to be operated simultaneously. If an extraction fan is proposed to be fitted to a connecting area of the house, after the stove has been installed, professional advice should sought from a qualified engineer.

■ If a flue blockage or adverse weather conditions cause the insert to emit smoke, do not treat it as merely a nuisance, this smoke will indicate that carbon monoxide is being emitted into the room. Properly installed, operated and maintained this stove will not emit fumes into the dwelling. Occasional fumes from de-ashing and re-fuelling may occur. However persistent fume emissions are potentially dangerous and must not be tolerated. WARNING: If fume emissions persist the following immediate action should be taken:
Turn the insert to its minimum firing rate, open windows to ventilate the room and leave the premises and allow the insert's fuel to burn out before closing the windows. Do not re-light the insert without consulting a qualified engineer. Your installing engineer should have fitted a CO alarm in the same room as the stove. If the alarm sounds unexpectedly, follow the instructions in the above paragraph.

■ In the event of a chimney fire the stove should be turned to its minimum setting and the fire brigade informed. Do not re-light the stove until the complete installation has been inspected by a qualified engineer.

■ The appliance should be inspected regularly and the chimney cleaned at least annually. More frequent cleaning may be required and the advice of a qualified chimney sweep should be sought. Always check for any flue blockage before lighting the stove after a prolonged shut down.

This stove has been carefully designed and constructed to give clean burning with optimum efficiency and safety, but as with all stoves these standards will not be achieved unless the stove is installed and maintained regularly by qualified engineers. It must also be operated strictly with the procedures given in this manual.

If you are unsure about anything concerning your stove please seek professional advice.

The Model Range Explained

Thank you for purchasing your stove and helping to protect our environment. Hwam and Euroheat insist on progressive development to produce products which are market leading. Our aims are to produce stoves with the latest innovations, user friendly operation and high efficiency for lower cost operation.

This operation manual offers user information for the range of Hwam 20/80, 30/45, 30/55, and 30/65 stoves.

Model Identification

You will see on the front page of this document a label which confirms which model you have. This label also advises you of the stoves unique serial number. This information is also attached to your stove for reference.

Important

Please ensure the warranty registration form is returned to Euroheat. In this way the model and its history will be recorded for reference in the future.

Hwam
Nydamsvej 53 Dk -8362 Horning Denmark

www.hwam.com

Euroheat Distributors (H.B.S). Ltd.
Unit 2,
Court Farm Business Park,
Bishops Frome,
Worcestershire. WR6 5AY.

www.euroheat.co.uk
info@euroheat.co.uk

Whilst we are always happy to assist you, please make sure you have read this manual before contacting the technical support team.
Technical Support Telephone Number 01885 491117. E-mail tech@euroheat.co.uk

Useful organisations

Solid Fuel Association	0845 601 4406	www.solidfuel.co.uk
The National Association of Chimney Sweeps	01785 811732	www.chimneyworks.co.uk
HETAS Ltd.	0845 634 5626	www.hetas.co.uk

Before Operating this Appliance

Always use the glove provided when tending the hot stove.
The paint used on the stove is a heat resistant paint capable of withstanding 650°C, but it needs to be heated for several hours to allow it to cure and attain its full hardness. The lighting procedure should be followed and the stove's first fire limited to a small fire for one hour, after which its size can be gradually increased to allow the stove to reach its operating temperature. As the temperature of the paint increases a blue hazy smoke will be apparent as the solvents in the paint are driven out. These fumes may activate a smoke detector, if fitted, and during this period the room must be ventilated by leaving the windows open and it should not be occupied by people or pets. The time taken for the paint to be fully cured will be dependant upon the temperature but you should allow at least six hours. If you re-paint or fit new parts to your stove, another period of curing will be necessary but the curing time will be very much shorter.

Choice of Fuels

Wood

All wood will burn slightly differently, but the most important differences between woods is their moisture content. Until the moisture has been driven off from the wood it will remain below its combustion temperature. When the outer skin has dried and beginning to burn, much of this heat energy will be wasted having to boil off the water remaining in the core of the wood. Copious amounts of water vapour, in all but the most insulated flue, will condense, and mix with the products of combustion to form creosote and other undesirable substances which will eat away the fabric of the flue, and eventually build up to block the flue. At any time this build up of tar will be capable of causing a chimney fire.

The advice to burn only "dry" wood is sometimes confusing because the atmospheric moisture will prevent wood ever becoming "dry". It is acceptable to burn wood with a moisture content of less than 20%, which can be achieved by splitting the wood, stacking it so as to allow air to circulate within the stack and storing it under cover for between 18 months and 30 months, depending on prevailing climatic conditions. The use of a wood moisture content meter will confirm the amount of water remaining in the wood easily. The practice of drying wood by the stove should be discouraged, firstly because it should be unnecessary, and secondly because stored wood will invariably become the home to many varieties of insects, many of whom enjoy eating wood. To introduce them into your house and encourage them with heat and time to make new homes in your furniture and structural timbers is not recommended.

Peat

Peat burns very well, but it is bulky and its distinct aroma will pervade your home and everything in it, but otherwise peat can be burned as wood.

Please note that HETAS Ltd Appliance Approval only covers the use of wood on this appliance. HETAS Ltd Approval does not cover the use of other fuels either alone or mixed with wood nor does it cover instructions for the use of other fuels.

The HWAM 20/80, HWAM 30/45 30/55 30/65 are not designed to burn coal, coal products or any mineral fuel. The use of these fuels will invalidate the manufacturers warranty.

General Tips about Fuelling

Because the surface area exposed to the air will dictate the speed at which it burns, smaller pieces of wood will give the maximum heat output from the stove but will quickly burn away. Larger logs will burn more slowly and will take longer to deliver the equivalent heat. The burning times and firing rate will also be controlled by the settings on the air supply; with the maximum air giving the highest heat output with the shortest burning time. Caution should be exercised if the maximum burning time is required because putting on large logs and shutting down the air supply is likely to promote very bad combustion unless the newly loaded logs are burning enthusiastically. Whenever turning the stove down it should be done in stages to allow all the releasing volatiles to burn; by shutting down the stove in stages the logs will be allowed time to cool and release diminishing amounts of volatiles. It is important that the control for the air wash remains at its mid position whatever the stove's firing rate is set to. Depending upon the dryness of the wood and the type of wood being burned it may be necessary to open the air wash further if deposits appear on the glass.

Stoves are not covered by a manufacturers warranty for any damaged caused by their being over fired.

Choice Of Logs

Never burn wood that is not dry or wood that has been subject to a manufacturing process, such as chipboard, as these contain resins of uncertain toxicity when burned. For the same reasons, wood that has been painted or treated with a preservative should never be burned.

Natural wood is described as being either “hardwood” or “softwood”. Typically all broad leaf trees that lose their leaves in the winter are called hardwoods, and the evergreen conifers are called softwoods. Whilst the wood from the two groups have structural differences, the terms do not define the density or hardness of the wood. Balsa, one of the softest and lightest of woods is classified as being a hardwood and Hemlock, a soft wood, is extremely hard.

The less density wood has, the more its structure is made up of open spaces meaning it will season faster and because of these voids it will burn faster because it will expose more surface area as it disintegrates. This makes light woods suitable for kindling or a rapidly developing fire but unless you enjoy putting wood onto a fire every few minutes it is unsuitable for burning over long periods. Although there is a difference in the speed at which woods burn, equal weights of wood will give very similar amounts of heat.

Because logs are concentric tubes of cells they season faster if they are split, halving the tubes and allowing the moisture to evaporate more easily. Similarly it also allows the volatile gases given off when the wood is heated in a stove to be emitted along its full length rather than at the log’s ends. This helps the gases to be distributed more evenly within the stove and improves not only the efficiency, and emission reduction of wood burning but gives a more attractive fire.

Putting logs onto the fire, bark side down and laying them, well spaced, in random orientation, rather than uniformly horizontally, will also help to increase the efficiency and attractiveness of the fire. To make this easier the ideal log length will be the length the stove’s combustion chamber can accommodate in all directions, and of proportionate cross-section, to allow you to load wood in a “higgledy-piggledy” manner.

DO NOT BURN

Anything but dry, natural wood. Wood that has been painted, treated or has hinges, nails or any plastic attached will almost certainly emit toxic matter when burned. For similar reasons bonded wood products such as chipboard, plywood or fibre board must never be burned.

DO NOT BURN

Household waste. Many seemingly innocuous items like box packaging have been coated with glazes which will produce toxic matter when burned. One old video tape put on the fire will cause more pollution in a few minutes than a life time of wood burning. Not only will a fire burning rubbish pollute, the stove is not designed to contain such an assortment of sizes and weights and a flaming box falling from the stove when the door is opened will present an unacceptable fire hazard.

WARNING NOTE

Properly installed,operated and maintained a stove will not emit fumes into the dwelling. Occasional fumes from de-ashing and re-fuelling may occur. However, persistant fume emission is potentially dangerous and must not be tolerated. If fume emission does persist,then the following immediate action should be taken:-

(a) Open doors and windows to veentilate the room and then leave the premises.

(b) Let the fire go out

(c) Check for the flue or chimneyblockage and clean if required.

(d) Do not attempt to relight the fire until the cause of fume emission has been identified and corrected, if necessary seek expert advice.

The most common cause of fume emission is flueway or chimney blockage. For your own safety these must be kept clean at all times

CO ALARM

Your installer should have fitted a CO alarm in the same room as the appliance. If the alarm sounds unexpectedly follow the instructions given under “Warning Note” above.

Correct Placement of Internal Plates

Hwam 20/80

Before using the stove, please ensure that all separate components are correctly placed.

The smoke plate (2) must lie on the rear plate and on the slanting side plates. It must fall into position in the track on the rear plate.

The steel smoke plate (1) is held in position by two wedges each of which is pushed into the eyes on the internal top plate.

The cover plate (3) is placed on top of the grate to prevent embers from falling into the ash pan.

The ash pan (5) is in the ash pit.

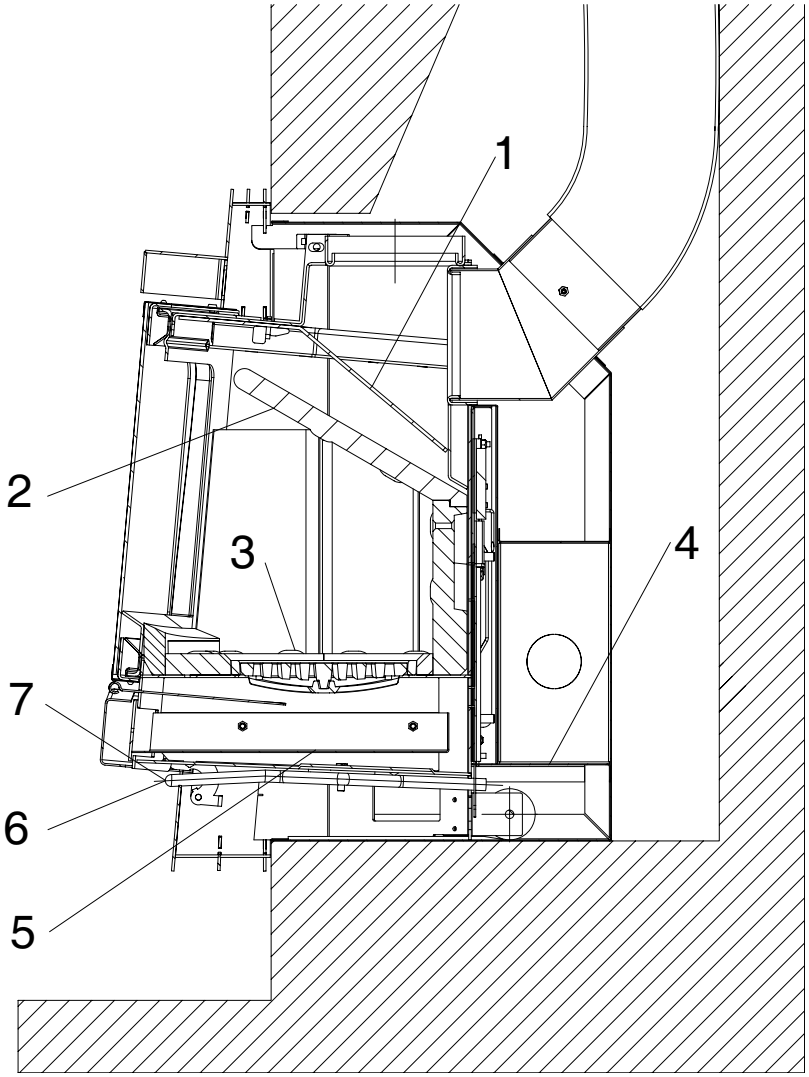

Hwam 30/45 30/55 and 30/65

Before using the stove, please ensure that all separate components are correctly placed,

The smoke plate (1) must lie on the rear plate and on the slanting side plates. It must fall into position in the track on the rear plate.

The steel smoke plate (2) is held in position by two wedges each of which is pushed into the eyes on the internal top plate.

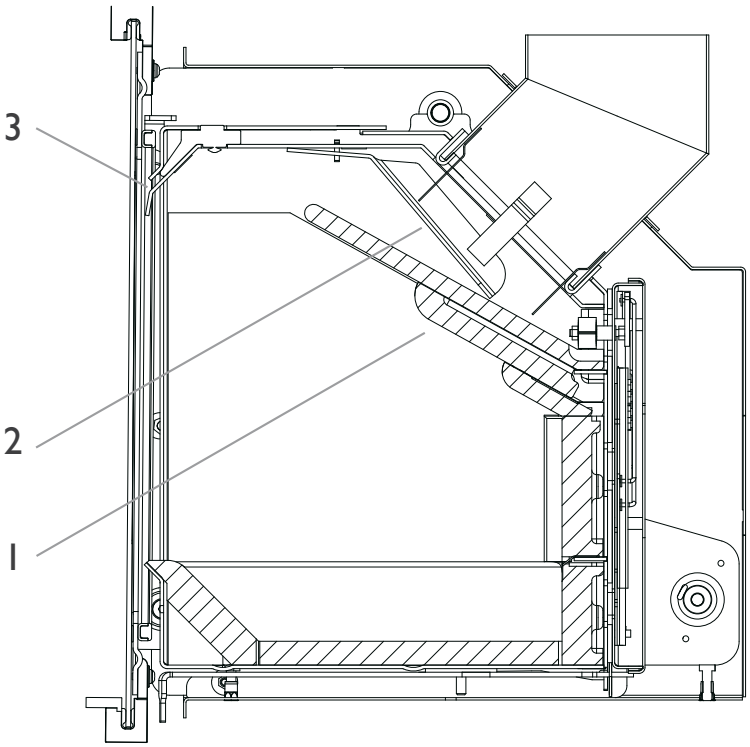

Stove Controls

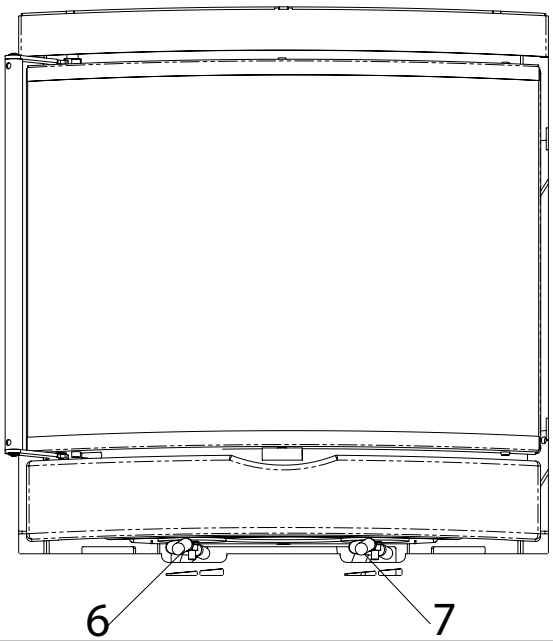

Model 20/80

On this model the air control 6. regulates the amount of air entering the air wash to keep the glass free of soot.

The amount of air available for the stove's automatically controlled primary and secondary combustion air system is governed by the control 7. When the control is to the left only a minimum supply is available, when set to the right the maximum air is available.

Models 30/45 30/55 and 30/65

This model has only the one air control which regulates the amount of air available for the stove's automatically controlled primary and secondary combustion air system is governed by the control 7. When the control is to the left only a minimum supply is available, when set to the right the maximum air is available.

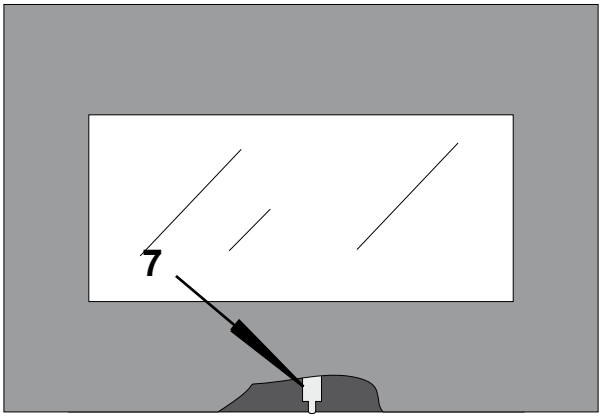

Important! Do not open the ash pan when lighting up and always keep it closed when the insert stove is in use, otherwise you may destroy the automatic control. The main door must only be opened when lighting the fire, when loading and when removing ashes.

The Automatic Combustion System

A bimetallic coil responds to the heat in the secondary combustion chamber by expanding and contracting, causing it to rotate its central spindle, the spindle is attached to an arm which raises or lowers, dependant upon the heat of the flue gasses, a plate or plates which open or close the primary air (lower inlet) and the secondary air (upper inlet).

The Three Phases of a Fire:

1) The lighting phase, where there must be an air supply at the top and bottom of the fire (secondary and primary air, respectively).

2) The combustion phase. At the ideal temperature of between 1000-1200° Celsius the coil will have closed the primary air supply and the fire will receive all its air supply from the secondary inlet.

3) The burning-out phase. As the temperature falls, the air supply above the fire is gradually reduced, and the primary air is increased, to supply air to the embers.

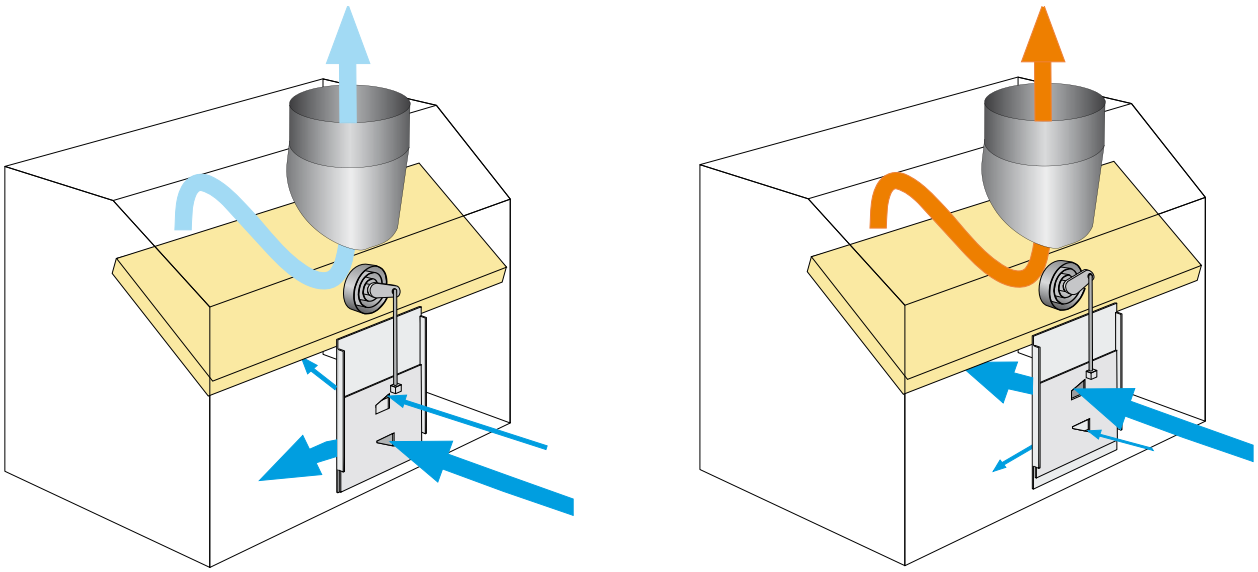

When the flue temperature is low the cold bimetallic coil positions the shutter to maximise the air supply below the grate. As the flue increases in temperature the coil heats and begins to unwind, causing the air being sent under the grate to be reduced and the air supplied above the grate to be increased.

Grate Cover Plate

The HWAM 20/80 stove is supplied with a loose cover plate for the riddling grate. This 3mm thick steel plate must be positioned to rest centrally on the top of the riddling grate to prevent burning embers from falling into the ash pan. When fitted correctly the plate allows an 8 mm peripheral slot above the grate, ensuring that the primary air supply is distributed evenly across the base of the combustion chamber.

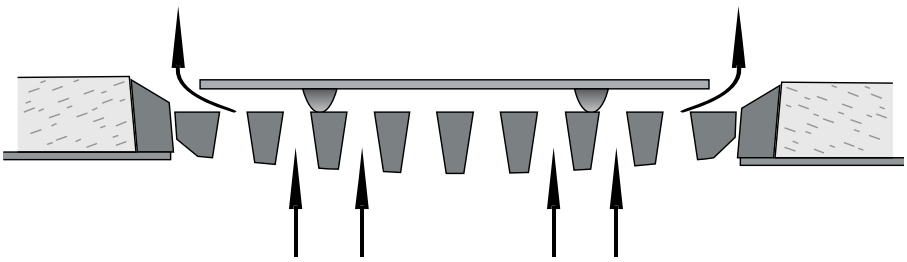

First Lighting of the Stove

When you light the stove for the first few times it should be with small fires increasing in size, as all the materials must be given time to adapt to the effects of heat. The paint on the body of the stove will be fully hardened after the stove has been cured, however the door and the ash pan should be opened very carefully before curing as there will otherwise be a risk that the gaskets will stick to the paint. If the chimney has been used previously and was not newly lined when the stove was installed it must be swept before lighting the stove for the first time. The chimney will need to be swept again after about one hundred hours of stove operation to ensure no old debris remaining have loosened or have fallen.

Curing

The paint may initially give off unpleasant fumes and an odour, so make sure that the room is well ventilated. The paint will be soft, so care must be taken with the stove for the first 6-8 firings. Curing the paint is necessary on all stoves and is not a fault.

We recommend following lighting procedure for lighting the stove for the first time.

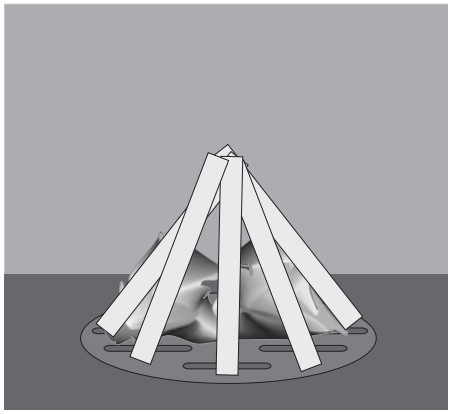

Make sure the air controls are set to maximum and the ash-pit is closed. Place two lightly crumpled sheets of tabloid sized newspaper in the stove, then lean some small, extremely dry kindling with a diameter of between 3–5cm against the paper to give a conical formation, leaving space between each piece. Leave the door of the stove slightly open, keeping the door slightly ajar until the kindling is burning brightly, then close it securely.
Do not leave the stove unattended with the door open.

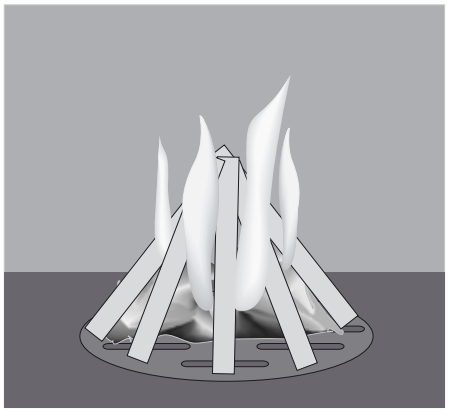

When the original kindling is burning well, add a similar amount of kindling.

Always use the glove supplied with the stove when loading with fuel or operating any of the controls or handles.

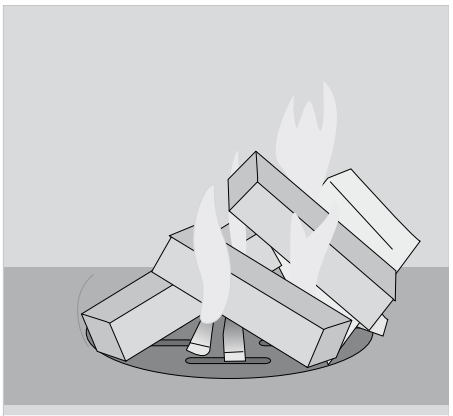

Adjust the burning rate control to mid/low setting.

Using small logs keep the fire burning low for two hours then gradually build up the fire.

General Lighting and Operation

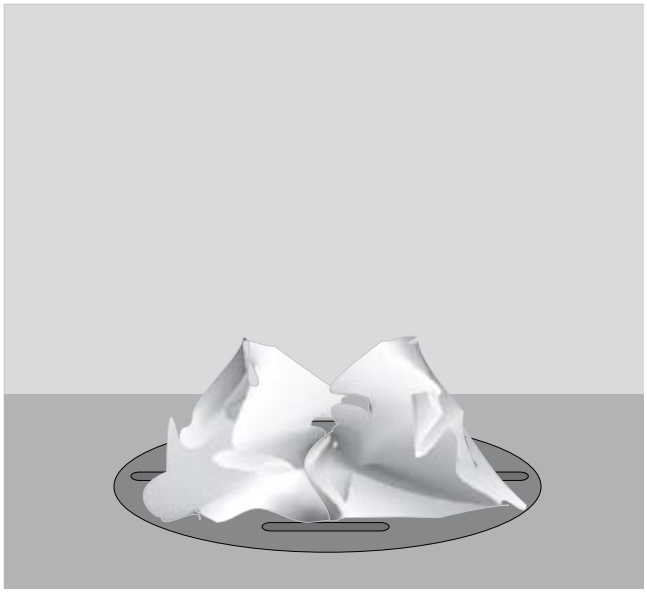

Lightly crumple two tabloid sized pieces of newspaper and lay them in the middle of the grate.

Resist the temptation to use more paper than this, or to crumple it too tightly; doing either will prevent the rapid development of flames and will cause smoke to be produced.

The kindling wood should be placed over the paper so as to rest against each other in a conical formation, leaving space between each piece.

Set both the air wash control (20/80 only) and the burn rate control to their maximum setting.

Light the paper using a long match or spill and leave the stove door slightly ajar.

The lightly crumpled paper will begin burning rapidly and the space between the kindling will allow the long bright flames to pass between and over the wood, raising it to its ignition temperature.

Keep the door slightly ajar until the kindling is burning brightly. Then shut the door. **Never leave the stove unattended with the stove door open.**

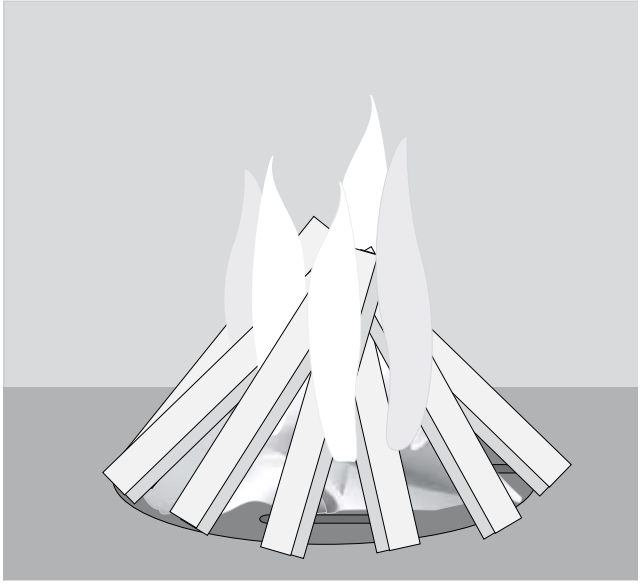

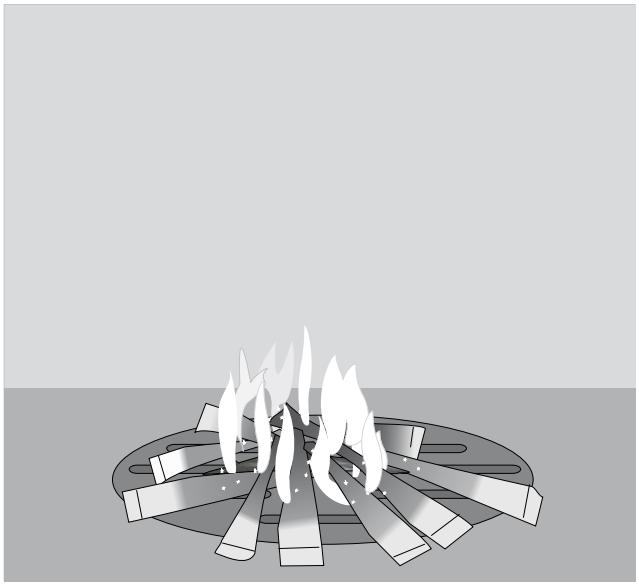

As the cone of kindling burns it will collapse and the inner ends of the wood will begin to char and glow.

Wait until the kindling is burning at its maximum rate before moving onto the next stage.

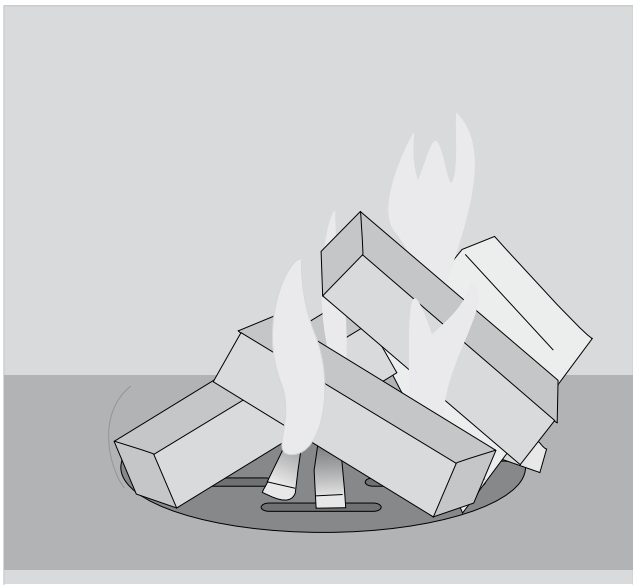

Wearing the stove glove place a few logs larger than kindling wood over, but not smothering the kindling.

When the previous loading of wood is burning brightly add two larger split logs to bridge the fire. Always avoid putting wood directly onto wood burning with flame, try and leave air space under the wood for the flame to form, because the new, cold log will tend to cool the fire.

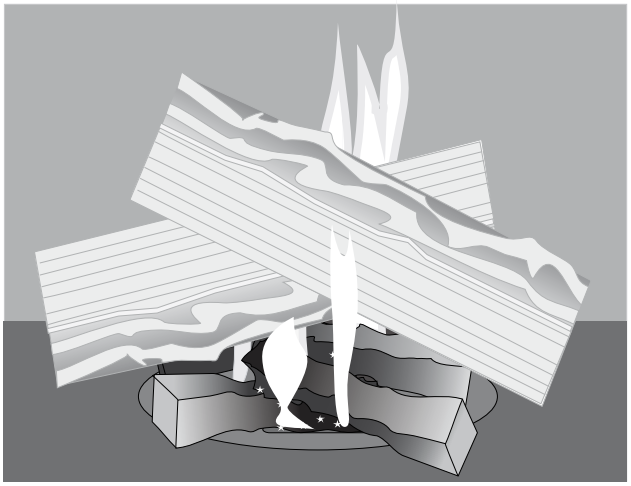

Reduce the burn rate control setting when the fire is established to the desired heat output and set the air wash control (20/80 only) to the mid setting.

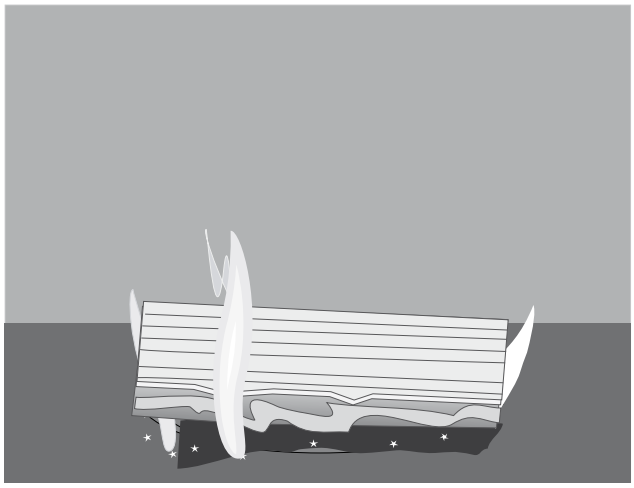

Putting new logs bark side down, will give you both maximum efficiency and best visual effect as it begins to burn.

At the rear of the combustion chamber you will observe that there are a series of holes or slots, these are there to allow air into the combustion chamber and should NOT be covered at any time.

General Maintenance of the Stove

Ash Removal 20/80

The ash pan must NOT be removed and emptied when the stove is operating. Removal of the ash pan when the stove is lit will allow unregulated air to enter the stove which can damage the automatic combustion control system.

Do not allow ash to block the combustion air slots/holes at the rear of the combustion chamber. We recommend that these slots/holes are cleared regularly.

The embers within the ashes may remain alight for up to 24 hours after the stove has gone out, so they must be disposed of in a non-combustible container.

Ash Removal i30/45 i30/55 and i30/65

We recommend the use of an Ash Vac for ash removal of the above appliances, However wood burns quite happily on a bed of ash, so the removal of it may be very infrequent. If an ash vac is not available a small shovel and bucket can be used. Be very carefull not to damage the mica baffle and bricks.

Cleaning the Glass

Before attempting to clean your stove's glass the stove must be extinguished and allowed to cool, it would be potentially unsafe to, and would risk the glass shattering if attempts are made to clean it while hot.

The glass in your stove is specially formulated to withstand the very high temperatures and proprietary glass cleaners developed for ordinary glass are not recommended as their compositions may contain chemicals that will weaken or etch into the glass.

Newspaper moistened with water to which a little vinegar has been added will normally remove most staining, but for really stubborn marks, gentle polishing with fine steel wool lubricated with a few drops of dish washing detergent will need to be employed. Great care must be taken not to clean the glass too vigorously as particles of grit may have adhered with the stain and these could cause scratching if dragged across the glass. However well the stove burns it will eventually become necessary to clean the glass, but if cleaning becomes necessary too often we advise you to review your operating procedures to determine whether cleaner and more efficient combustion can be achieved.

Check the condition of the seals around the glass regularly for signs of leakage; replace only using the manufacturer's sealing gaskets.

To clean the glass on the i30/45, i30/55 and the i30/65 open the lift up door half way and hold it there.
At the same time pull the arms (1) outwards off and over screw (2) and the glass will come forward.
You can then lower the glass door down and rest the bottom edge off the glass against the body of the stove.

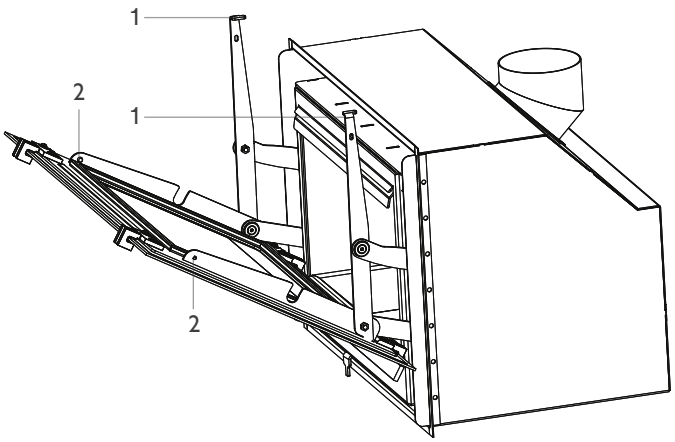

The Stove Body

Any maintenance of the stove should only be carried out when it is cold. Daily maintenance is limited to vacuum cleaning the stove externally, using the soft brush attachment. You can also dust the stove using a dry, soft cloth or brush, but only when the stove is cold.

Maintaining Painted Surfaces

No paint will tolerate the temperatures within the stove's combustion chamber and it is normal for the paint within the combustion chamber to loosen and flake. If the stove's exterior paintwork becomes damaged it can be simply repaired by sanding the area with a fine wet and dry paper and the using a Hwam approved paint to respray the area.

Never use or store any aerosol near the stove when it is operating or warm. Aerosols can give off an explosive vapour which may be drawn into the stove and explode.

Spray Paint

Order product number HW99-0043BL for black surfaces, and HW99-0043GRY for grey surfaces.

Professional Maintenance

The stove and the installation should be thoroughly inspected and serviced by a suitably qualified heating engineer annually. The combustion chamber should be cleared of ashes and soot. Door and fittings should be lubricated using a copper-based grease.

Operational Problems

Blackened Glass

The wood is too damp. Only use wood stored for at least 12 months under cover and with a moisture level not exceeding 25%.

Insufficient intake of secondary air for the glass air wash.

Smoke in the Room when Opening Door

Open the door slowly, to allow the air flow and pressure changes within the stove to adjust.
Insufficient chimney draught. See the section on the chimney installation instructions or contact a chimney sweep. Soot door leaking or dislodged. Replace or refit.
Never open the door when there are more than small flames from the wood.
If smoke appears when the stove door is closed, turn the stove to its minimum settings, open the room windows until the fire is extinguished and ascertain the cause of the smoke before relighting the stove

Uncontrollable Combustion

Faulty seal in door or ash pan. Fit new seal.
If there is an excessive chimney draft, it may be necessary to fit a draught stabilizer or a stabilizing cowl (See installation instructions).
If the steel plates in the combustion chamber delaminate to develop scales or become deformed, this is due to excessive heat caused by over firing the stove. This can be caused by excessive chimney draught, or incorrect operation of the stove. If over firing is evident contact your local retailer who can advise you on the cause and most suitable remedy.

Noise

As the metalwork of the stove expands and contracts with the rise and fall of temperature those parts expanding or contracting faster than an adjacent part emit a ticking noise as they fret against each other. Larger parts getting to high temperatures may make a louder noise as their expansion and contraction allows them to spring into a minutely different profile. None of these causes of noise have any effect on the operation or longevity of the stove. A whistling noise is evidence of a leaking stove or flue and should be investigated as soon as practicable.

Cracked Glass

The glass in the stove door is a special ceramic glass capable of withstanding extremely high temperatures, but it is particularly sensitive to knocks and blows at high temperatures and sudden localised differences in temperature.
If the door is closed aggressively or is subjected to knocks and blows in other ways, there is a high risk of the glass cracking, typically at the corners where it is secured to the door. A flame impinging against the glass will cause the impingement area to overheat and initiate a crack. **Do not operate the stove with a faulty glass.**

White or Opaque Glass

If soot or tar is allowed to be deposited form on the glass it will eventually clear when the stove reaches a high temperature but a white haze will remain on the glass. This can be wiped off when the stove is cold but the stove's operation should be reviewed to avoid staining. If the glass becomes too hot it will firstly begin to craze then revert to its original opaque white appearance, irrevocably. This happens when flames are allowed to impinge against the glass producing typically coin sized round white areas. Replacement of the glass will become necessary if this is allowed to happen. **Do not operate the stove with a faulty glass.**

Burning anything but natural wood will not only harm the environment, but the chemicals formed when resins and other substances are heated may cause the glass to craze and be weakened, necessitating its replacement.

Other Maintenance

The stove must be cleaned of ash and any tarring as often as your use of the stove dictates. All deposits on the stove interior will insulate the stove body from the fire and will reduce the stove's efficiency. Flue ways which become choked will not only reduce the stoves performance but can become a serious health risk if the flue is not taking away all the gaseous products of combustion. It is important that all the stove seals are replaced when any signs of wear are apparent or they become degraded and that only parts approved by Hwam/Euroheat are fitted, these may be obtained from your local retailer or directly from Euroheat.

Summer Shut Down

At the end of each heating season the entire installation should be thoroughly cleaned and examined for soundness, this should include having the flue examined by a registered sweep. The stove interior should be thoroughly cleaned of all ash, taking due precautions because embers my still be alight for over twenty four hours after the stove has been let out. All interior metalwork should be protected by a proprietary surface moisture repellant. The controls may be set to their open position to allow air to pass through the stove and flue to reduce the risk of condensation causing damage. All operating mechanisms should be lubricated with a high temperature grease.
Always check the stove and flue for any blockage before lighting the stove after a prolonged shut down.

Faulty Operation

If poor fuel and haphazard operating procedures can be ruled out, excess or poor flue draught are the most likely cause of a badly performing stove. A flue draught manometer will identify these quickly, but the actual causes of things such as an unreliable flue draught may take some considerable time, even by an experienced engineer to identify. However, if the stove has never performed correctly, call back the installation engineer. If its performance has deteriorated, examine the stove and the flue for soot and debris accumulation; ensure the door and glass seals are sound before contacting the engineer.

The Flue

Because so little of the fires heat is lost to the flue the installation guides recommend that your chimney is lined and insulated. A badly insulated or an oversized flue may cause problems if humid flue gasses cool and form an acidic condensate on the surface of the flue. This may manifest itself as blackened water appearing beneath the flue pipe or discolouration on the chimney breast. Even if your flue is correctly lined it is advisable to run your stove at a high setting to thoroughly warm the flue periodically and ensure it is swept regularly by a qualified sweep who will be able to advise you of any potential problems before they become hazardous. The chimney should be swept after six months operation by a qualified sweep at least annually, even if the stove is only used occasionally and the sweep will be able to advise you if more frequent sweeping is necessary. Before sweeping, the air controls must be turned to the minimum setting to prevent soot and ash from entering the automatic system.

National Chimney Sweeps Association
Telephone 01785 811732

For additional chimney information see the installation guides included with the appliance or contact the Solid Fuel Association.

The Combustion Chamber Lining has Cracked or Broken Panels

The fireproof lining panels in the combustion chamber are made of vermiculite, which is a natural material that can withstand very high temperatures, that reflect the heat within the combustion chamber to maintain the optimum temperature within the combustion chamber while protecting the metalwork. However, the material will not withstand mechanical abuse and will be damaged by heavy blows from logs being badly loaded. Cracks in otherwise correctly positioned panels will not have an adverse effect of the stove or its ability to burn correctly, but incomplete panels or panels worn to less than 50% of their original thickness must be replaced.

Service

The installation and stove should be inspected and serviced annually but even if the stove is only used periodically it should have a thorough service check at least every other year. This service check must include the following:

- Thoroughly cleaning of the stove and removal of all ash.
- Checking of the door lift and greasing the opening mechanism with heat resistant grease.
- Checking of the spring for the chain pull and replacing if necessary.
- Checking of manual air controls and automatic air control system.
- Checking of gaskets and replace if necessary.
  (The door gasket should always be replaced annually)
- Checking of the combustion chamber panels and replacing if necessary.
- Checking of the bottom/shaking grate.

All service checks must be performed by an authorized fitter. Use only original manufacturer spare parts.

The flue must be cleaned and inspected to verify its safety by a registered sweep.

Chimney Cleaning

To facilitate cleaning through the stove to the flue the vermiculite and the steel baffle will need to be removed To remove the vermiculite baffle plate. Push the plate backwards, lift it upwards and slightly sideways, tilt down one side and the plate should be free and can be removed from the combustion chamber. To remove the iron baffle plate. Straighten the transport lock. Lift the plate off the hooks after which it may be removed from the combustion chamber. See the installation document for more information.

Hwam
Intelligent Heat

Euroheat
Natural Energy Company

Installation Instructions
For Wood Stoves
20/80
30/45
30/55
30/65

Since April 2002 only Registered Competent Engineers may install solid fuel fired appliances without involving the Local Authority Building Control Department. For more details contact HETAS.
Euroheat would suggest only Registered Competent Engineers such as HETAS approved engineers install Euroheat appliances.
If a competent approved engineer is not employed to install your appliance your local building control must be contacted and a building control number issued.

This Manual Must Always be Available to the Stove Operator

HETAS
APPROVED APPLIANCE SCHEME

HETAS Ltd. Approval.
The Hwam 30/55 and Hwam 20/80 stoves have been approved by HETAS Ltd. as intermittent operating appliances for wood burning only.

Part No.

Model Name

Serial Number

IMPORTANT.

■ The installation of this appliance must comply with all local regulations, including those referring to national and European Standards before it can be operated. The stove is not suitable for a shared flue. However, for England and Wales, only, the coming into force on 1st April 2002 of SI 2002 No 440 exempts the householder from this legal requirement for the installation of solid fuel fired appliance whose rated heat output is 50kW or less in a building having no more than 3 storeys (excluding any basement) if a Competent Engineer is employed who is registered under the Registration Scheme for Companies and Engineers involved in the Installation and Maintenance of Domestic Solid Fuel Fired Equipment operated by HETAS Ltd. These registered Competent Engineers may also carry out associated building work necessary to ensure that the installed appliance complies with Building Regulations without involving the Local Authority Building Control Department. The installing engineer should refer to BS 8303: Code of practice for installation of domestic heating and cooking appliances burning solid mineral fuels.

■ Improper adjustment, alteration, maintenance or the fitting of replacement parts not recommended by the manufacturer can cause injury or property damage. Do not operate the stove with faulty seals or damaged glass.

■ Due to the high operating temperatures of this appliance it should be located away from pedestrian traffic and away from furniture and draperies. Do not store paper or wood near the appliance. Any mats and rugs put in front of the stove should be fire proof and secured to prevent the possibility of tripping.

■ Advise all persons as to the stove's high surface temperatures. If it is possible for children or infirm adults to come into contact with the stove, fit a suitable fire guard.

■ It is imperative that all air passageways into, out of, and within the appliance are kept clean. All permanent ventilation into the room provided for the stove must remain clear and unobstructed at all times. Consideration must be given to the need for extra ventilation if another heating source needing air is to be operated simultaneously. If an extraction fan is proposed to be fitted to a connecting area of the house, after the stove has been installed, professional advice should be sought from a qualified engineer.

■ The user should be advised that the appliance should be inspected regularly and the chimney cleaned at least annually.
More frequent cleaning may be required and the advice of a qualified chimney sweep should be sought.

■ Our range of stoves is capable of operating with outstanding efficiency if the flue system is correct. Because so little heat is wasted to the flue it is possible that moisture within the products of combustion will condense if the heat losses within the flue way are too great and allow the flue gases to cool. For this reason we recommend that the stove is fitted with a suitable flue liner, the same diameter as the flue spigot, to prevent the possibility of acidic damage to the fabric of the chimney and damage to the stove which will reduce the longevity of the stove. The flue pipe and chimney flue diameter must at no point be less than the diameter of the stove flue outlet. The installing engineer should refer to BS EN 15287-1:2007 design, installation and commissioning of chimneys.

■ When correctly installed, the stove is designed to produce heat, safely. It cannot do so if the installation is less than absolutely stable, constructed of materials suitable for such an installation and consideration has not been given to the possibility of people with less than ideal common sense operating it.

■ Have the existing chimney swept by a chimney sweep. Although you will be lining the chimney, any deposits left in the chimney will cause problems and may become a fire hazard.

■ Your attention is drawn to the precautions and responsibilities under the Health and Safety at Work Acts, and whatever new legislation being introduced during the life of this document. Especially to the possibility of disturbing asbestos when disturbing structures in older properties. Also the caustic nature of fire cement. The personal risk of injury when moving heavy items with possible sharp edges.

Thank you for purchasing your stove and helping to protect our environment. Hwam and Euroheat insist on progressive development to produce products which are market leading. Our aims are to produce stoves with the latest innovations, user friendly operation and high efficiency for lower cost operation.

Model Identification

You will see on the front page of this document a label which confirms which model you have. This label also advises you of the stoves unique serial number. This information is also attached to your stove for reference.

Important

Please ensure the warranty registration form is returned to Euroheat. In this way the model and its history will be recorded for reference in the future.

Hwam
Nydamsvej 53 Dk -8362 Horning Denmark
www.hwam.com

Euroheat Distributors (H.B.S). Ltd.
Unit 2,
Court Farm Business Park,
Bishops Frome,
Worcestershire. WR6 5AY.
www.euroheat.co.uk
info@euroheat.co.uk

Whilst we are always happy to assist you, please make sure you have read this manual before contacting the technical support team.
Technical support Telephone Number 01885 491117. E-mail tech@euroheat.co.uk

Useful organisations

Solid Fuel Association	0845 601 4406	www.solidfuel.co.uk
The National Association of Chimney Sweeps	01785 811732	www.chimneyworks.co.uk
HETAS Ltd.	0845 634 5626	www.hetas.co.uk

Before Operating this Appliance

The paint used on the stove is a heat resistant paint capable of withstanding 650°C, but it needs to be heated for several hours to allow it to cure and attain its full hardness. The lighting procedure should be followed and the stove's first fire limited to a small fire for one hour, after which its size can be gradually increased to allow the stove to reach its operating temperature. As the temperature of the paint increases a blue hazy smoke will be apparent as the solvents in the paint are driven out. These fumes may activate a smoke detector, if fitted, and during this period the room must be ventilated by leaving the windows open and it should not be occupied by people or pets. The time taken for the paint to be fully cured will be dependant upon the temperature but you should allow at least six hours. If you re-paint or fit new parts to your stove, another period of curing will be necessary but the curing time will be very much shorter.

Technical Details Intermittent Operation

Intermittent operation is when the appliance is used for short firing periods for example 45 minutes to 2 hours. This is a common operation in warmer weather such as cold spring evenings. The information provided below where indicated as HETAS approved is from the current CE standards EN 13240:2001 and EN 13240 A2:2004. The test fuel is wood.

Model Name	Heat Output Nominal Wood	Flue Draught Nominal Heat Output	Flue Gas Temperature deg C
i20/80	6kW	12pa	290
I30/55	6kW	12pa	237
i30/65	10kW	12pa	272
i30/45	4kW	12pa	232

Model	Flue Size	Air Requirement Equivalent Area as Approved Document J	Efficiency Net %	Efficiency Gross %	Weight
i20/80	6″ (153mm)	550mm^2	73	66	98kg
i30/55	6″ (153mm)	550mm^2	79	71	98kg
i30/65	6″(153mm)	2750mm^2	79	72	126kg
i30/45	6″ (153mm)	refer to doc J	80	73	82kg

* Air requirement equivalent area. Building regulations Document J, advises that an air supply should be installed for appliances with a heating output over 5kW. Document J indicates that there should be sufficient advantageous air for heating outputs below this amount. With modern properties this may not always be the case and/or more free air may be required. Continuous or intermittent operation will result in different heating outputs due to the nature of the fuel and the appliance. If in doubt increase the suggested area listed or contact your HETAS approved engineer for assistance.

Useful Organizations UK

Solid Fuel Association	0845 601 4406	www.solidfuel.co.uk
The National Association of Chimney Sweeps	01785 811732	www.chimneyworks.co.uk
HETAS Ltd.	0845 634 5626	www.hetas.co.uk

Carbon Monoxide Alarms

Where a new solid fuel stove is installed in a property a carbon monoxide alarm should be located in the same room where the appliance is located:

a. on the ceiling at least 300mm from any wall or, if it is located on a wall, as high up as possible (above any doors and windows) but not within 150mm of the ceiling; and

b. between 1m am 3m horizontally from the appliance.

Carbon monoxide alarms should comply with BS EN 50291:2001 and be powered by a battery designed to operate for the working life of the alarm. The alarm should incorporate a warning device to alert users when the working life of the alarm is due to end. Mains-powered BS EN 50291 Type A carbon monoxide alarms with fixed wiring (not plug in types) may be used as alternative applications provided they are fitted with a sensor failure warning device.

The Hearth and Fire surround

The existing regulations give rigid rules for the construction and size of hearth required for an appliance burning solid fuel, 300mm minimum in front of the appliance, but these should be regarded as a minimum standard because they were written with an open fire or typical stove on legs in mind. These rules make provision for the protection of the property in the event of burning fuel falling from the fire, but the height of the fire bed in an open fire or conventional stove is not very high and as the horizontal distance any falling item travels is, amongst other factors, dependant upon the height from which it starts, it should be apparent that anything falling from an insert stove positioned with its fire bed one meter above the floor will have the impetus to travel further across the floor than the regulations allowed for. A hearth having an edge lip is preferable to a simple flat hearth in its ability to reduce the hazard but because no hard and fast rules can be given you have to assume that Murphy's Law which states that "If it can, it will" applies and any combustible flooring should be kept well out of range of the likely and even unlikely range of falling embers.

Germany has a long tradition of stoves called "Kachelöfen", which are stoves built into a tiled structure that acts as a heat store. The insert stove installed within its brick or block housing will behave in much the same way, using the bricks as a heat store. Although the brickwork will never become excessively hot it will become very warm if the stove is kept burning at a high rate. For this reason anything attached to the wall will also become very warm. This may cause damage to oil paintings and cause accelerated ageing in photographs and we advice you to restrict the pictures you hang on the walls of the stove housing to those which are of limited importance.

There has been a revival of interest in all forms of real fires and fire surrounds of every possible style and material now abound but sadly not all are built to the highest standards or with materials best suited to the high temperatures they will be subjected to. The minimum distances given in the drawing below will ensure the surround will be subjected to safe temperatures but it will not guarantee that a fire surround made from unseasoned wood will not shrink. If stone is to be used in any part of a fire surround it is important that both the shape and fixing allow for the stone's expansion as its temperature rises. Failure to make provision for the uneven expansion a fire surround will inevitably result in the stone cracking, in general the stone surround should comprise of four or more sections.

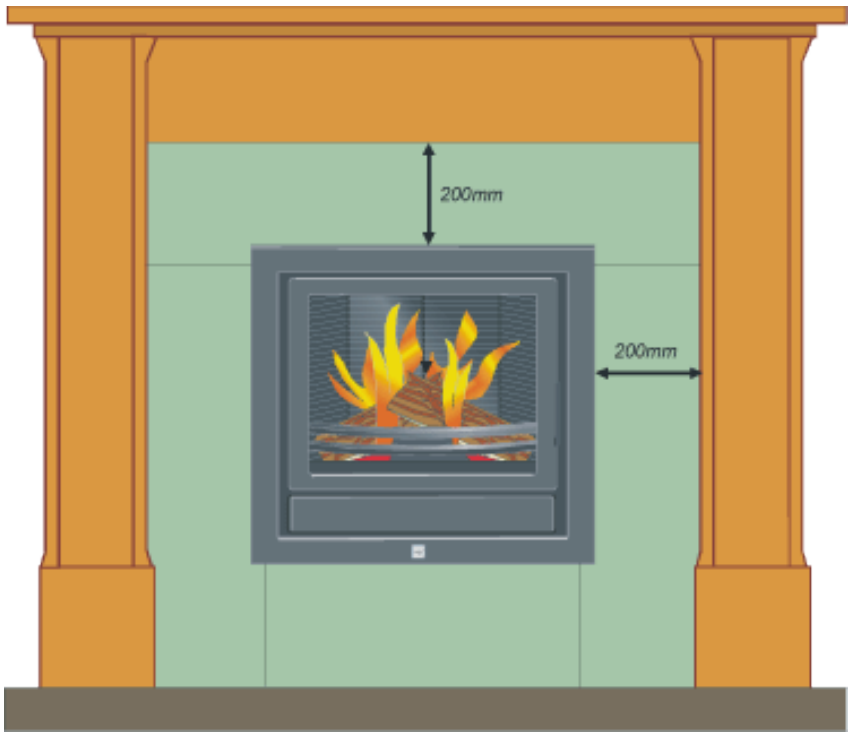

Minimum distance from extreme of stove front frame to any combustible material is 200mm. This includes wall coverings such as wallpaper.

All fire surrounds must be suitable for a real fire.

All stone must have provision for uneven expansion.

A non-combustible hearth must be provided in front of the stove to a minimum of 300mm.

A fire guard must be fitted if children or infirm adults are at risk of coming into contact with the stove.

Fireplace Design

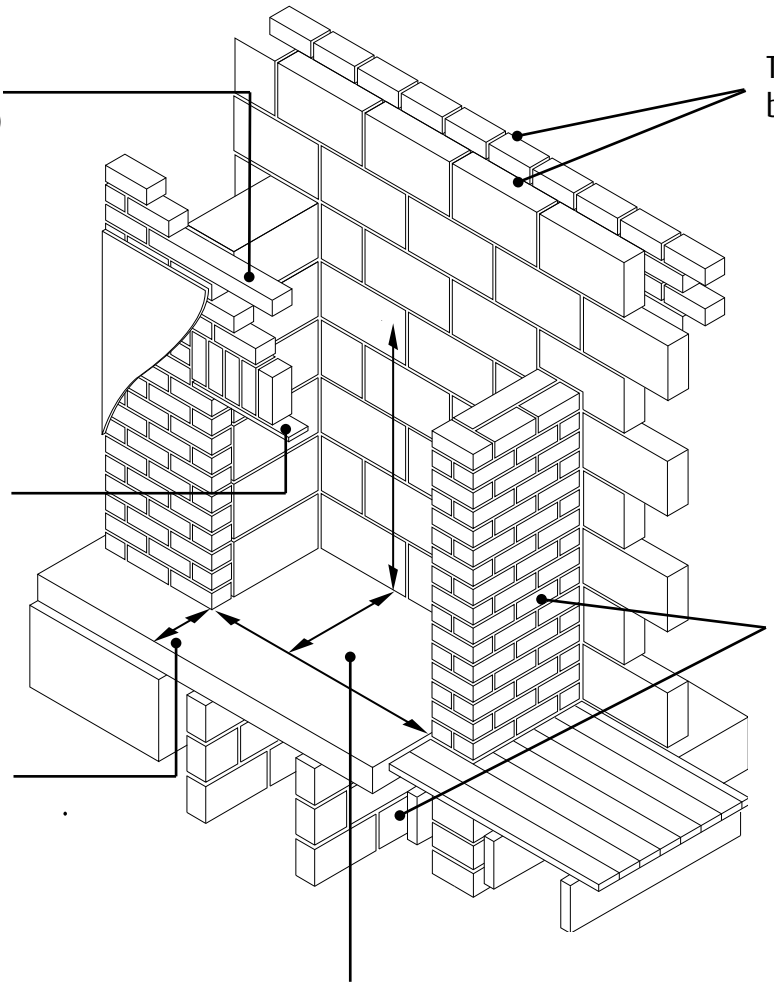

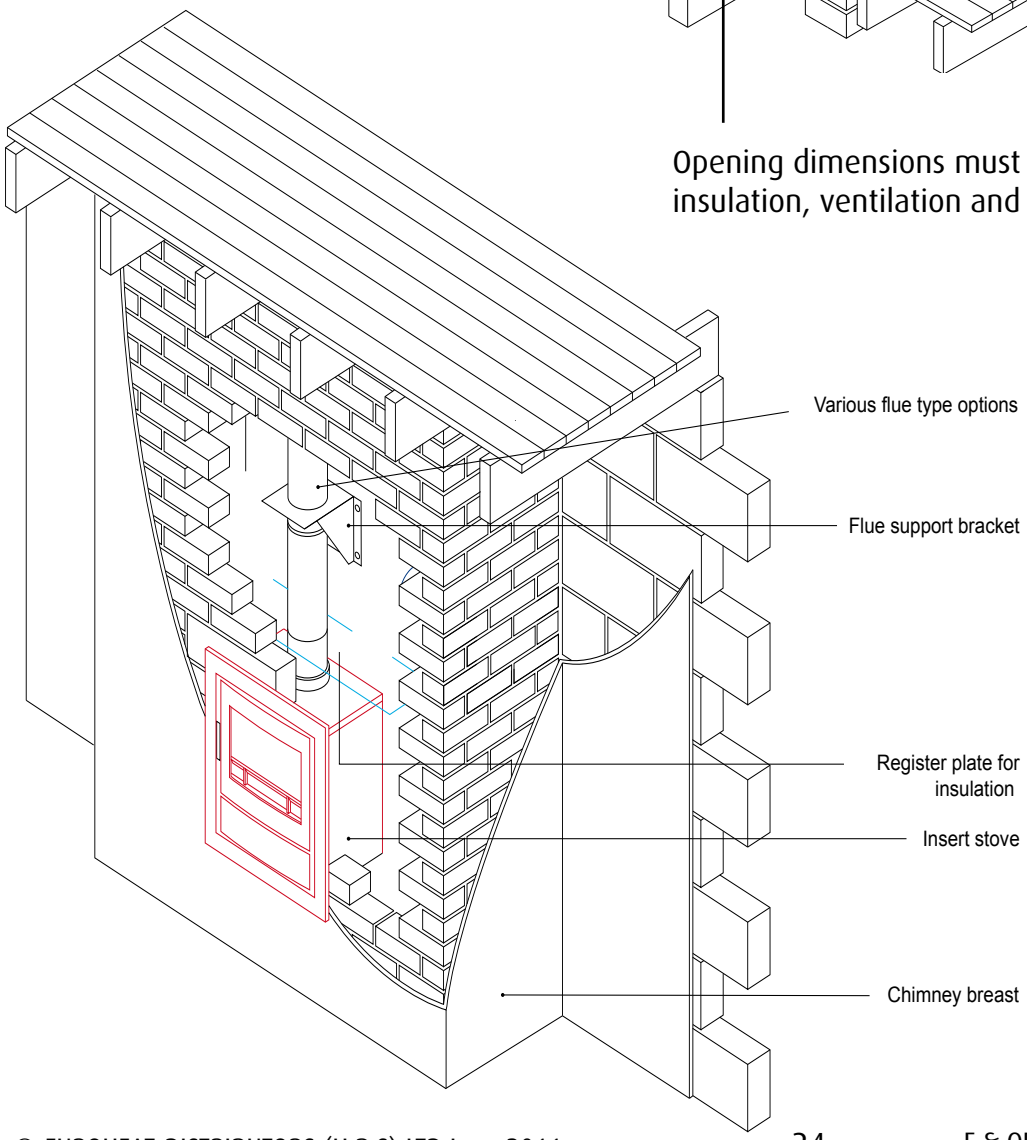

Mounting and connection For 20/80

HWAM I 20/80 consist of a detachable outer casing and a detachable stove insert which are pushed into place and connected, once the outer casing has been mounted.

HWAM I 20/80 can be connected in 2 ways:
1. Mounting and connecting in an existing fireplace.
2. New construction around the stove insert.

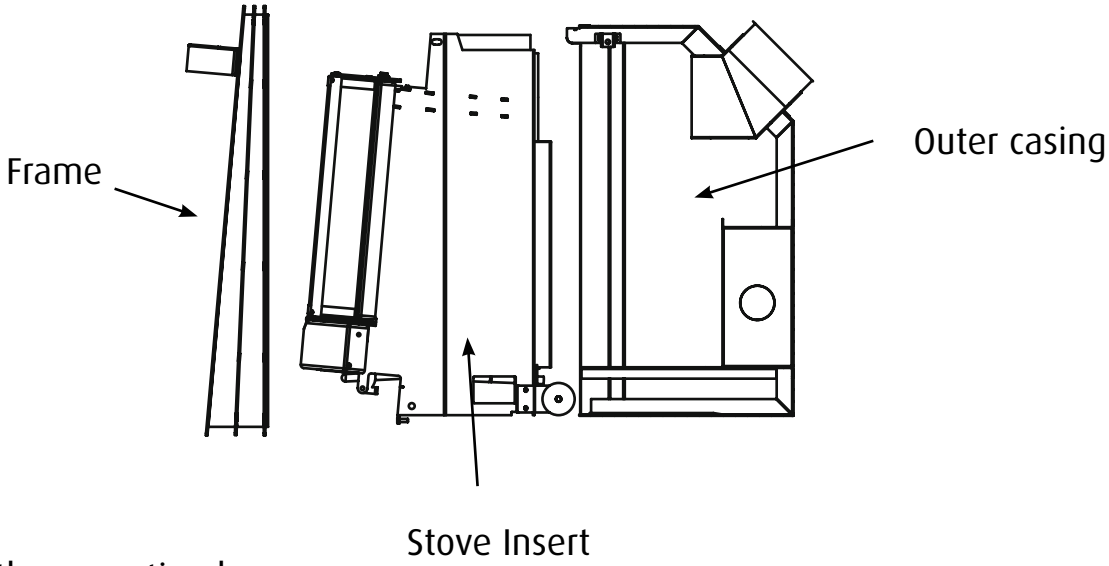

Installing the mounting box.
Place the fire tube in the chimney so that the joining flange corresponds to the given measurement.Support, if necessary, the lower edge of the joining flange with a stick
a. Distance from front edge of the brick hole, if the insert must be flush with the brickwork.
b. Distance from front edge of the brick hole, if a broad standard front frame lying outside the brickwork is used.
c. Height over the top of the stove insert.

Now push the three insulation slabs into the chamber and insulate up around the fire tube and press them up into the chimney thereby achieving a compact and tight-fitting seal.
Push the outer casing into place at the bottom of the fireplace. Carefully ensure that the outer casing is level and that its front edge is flush with the brickwork.
Remove smoke shelf (1) and smoke plate (2) from the stove insert.

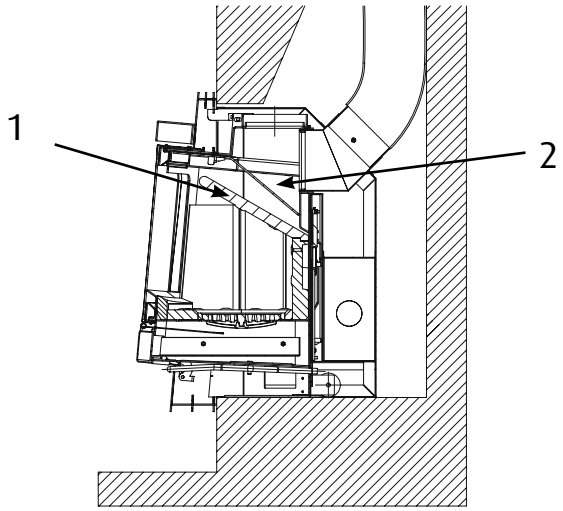

Place a Ø 5 mm seal into the bottom of the outlet bushing.
Then push the stove insert into place in the outer casing.
If the gap between the fireplace aperture and the mounting box is to be closed with brickwork, there must be a minimum distance of 3 mm around the mounting box. The brickwork above the mounting box must therefore be self-supporting. Secure the mounting box to the bricks with at least one screw in each side and one in the bottom, if necessary.

Connecting External Supply Of Fresh Air.

HWAM I 20/80 is ready to be connected to a fresh air system. which can be bought separately. The system comprises a flexible hose and three hose connections. The fresh air system can be connected to the mounting box in three places (right, left, and at the back).
Choose whether to connect the fresh air system to one of the sides or the back of the mounting box before installing the mounting box and the stove.
When connecting the system to one of the sides, round metal plates (A or B, drawing B1) must be pressed out of the mounting box. However, when connecting the system to the back of the mounting box, only one metal plate should be pushed out (C),
Attach a flange to each side (inside and outside) of the hole in the mounting box. The flexible hose can then be mounted on the flange on the outside of the mounting box. Then lead the flexible hose over into the ventilation pipe.

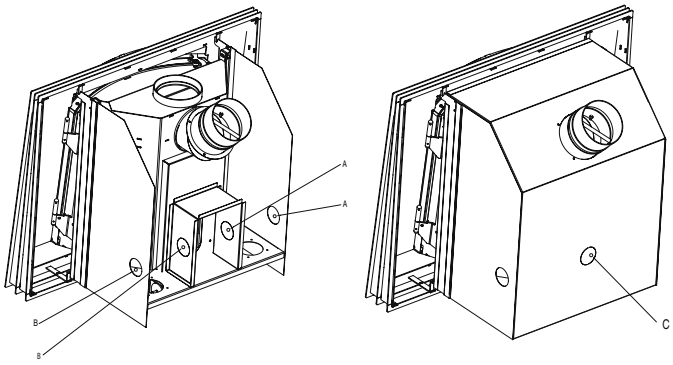

Grate Cover Plate

The HWAM 20/80 stove is supplied with a loose cover plate for the riddling grate. This is a 3 mm thick steel plate. It is placed on top of the riddling grate and prevents the embers from falling into the ash pan. The cover plate is raised approx. 8 mm above the grate, thus ensuring that the automatically controlled primary combustion air is distributed evenly at the base of the combustion chamber.

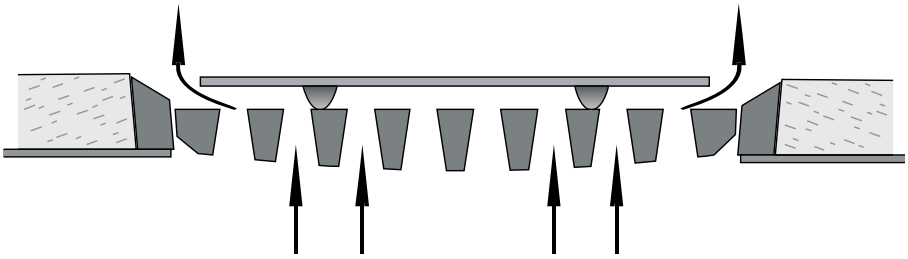

Mounting and connection For 30/55 and 30/65

HWAM I30/55 consist of a detachable outer casing and a detachable stove insert which are pushed into place and connected, once the outer casing has been mounted.

HWAM 30/55 can be connected in 2 ways:
1. Mounting and connecting in an existing fireplace.
2. New construction around the stove insert.

Installing the mounting box.
Place the fire tube in the chimney so that the joining flange(2) corresponds to the given measurements in diagram A, if necessary, support the lower edge of the joining flange with a stick
a. Distance from front edge of the brick hole
b. Height over the top of the stove insert.

Diagram A

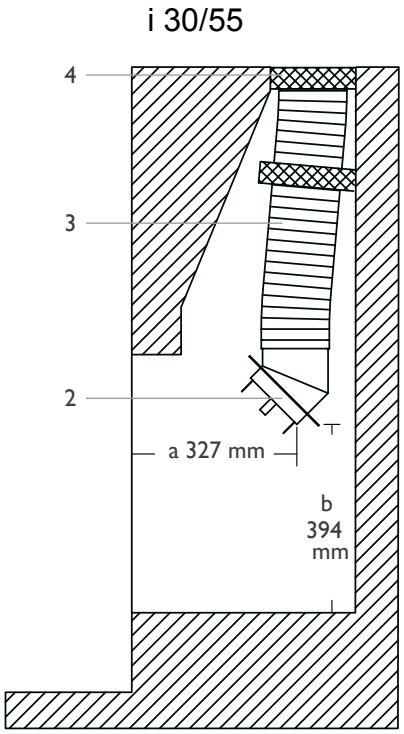

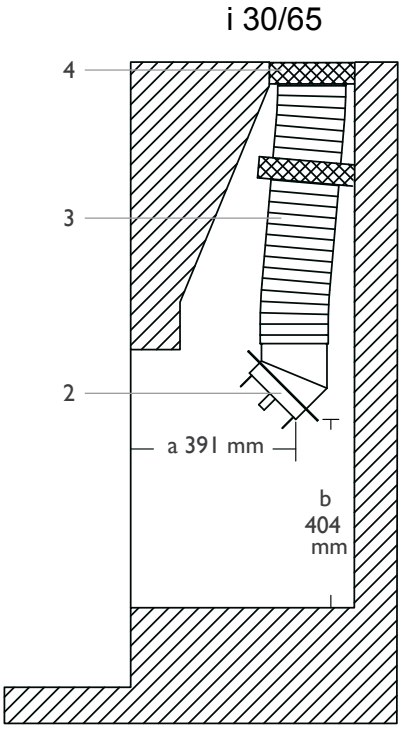

Diagram B

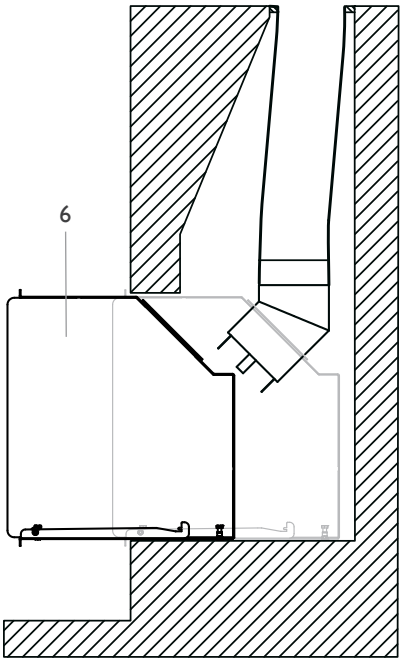

Now push the three insulation slabs into the chamber and insulate up around the fire tube (4) and press them up into the chimney thereby achieving a compact and tight-fitting seal. Diagram B ,Push the outer casing (6) into place at the bottom of the fireplace. Carefully ensure that the outer casing is level and that its front edge is flush with the brickwork.

The three adjustment screws in the bottom of
the casing can be used for fine adjustment so that the casing is completely level (drawing F).

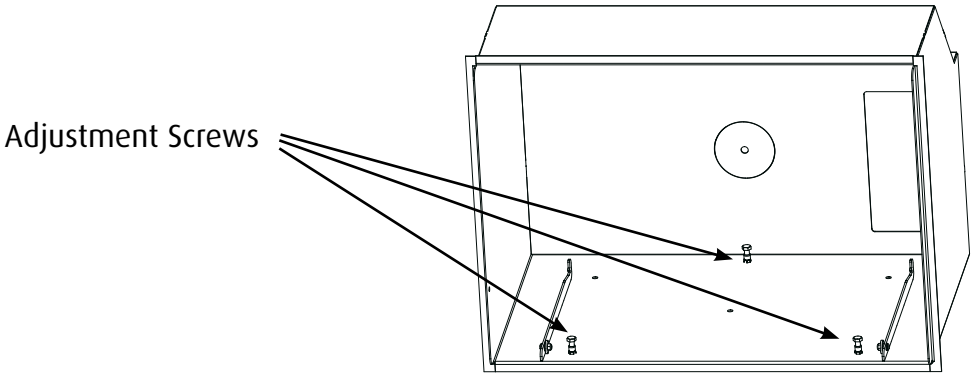

Mounting the insert (Diagram C)

Remove the smoke shelf (1) from the insert. Remove the transport fastening device by pulling out the two glazed pins located near the hanging hook for the smoke deflector plate on the right and left sides of the combustion chamber, respectively. Remove the smoke deflector plate (2) from the insert. Attach an Ø6 mm seal to the bottom the smoke outlet bushing. Then push the insert into place in the brickwork casing. Next, pull the connection pipe (3) down into the smoke outlet bushing and lock it by bending the four locking flaps (4) outwards on the sides on the inside of the insert. Afterwards, remount the smoke deflector plate (2) and smoke shelf (1).

Diagram C

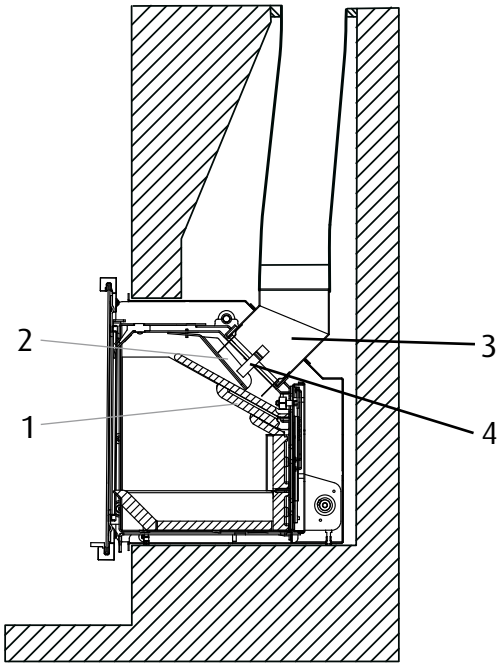

Restructuring of brickwork around insert

During the reconstruction, the outer casing should be carefully levelled off at a suitable height. Remember electric piping for 24 volt electricity supply to the controls (only applies to the HWAM I 31/55). As the reconstruction progresses, there should be a gap of a minimum 5 mm between the brickwork and the outer casing. The frame of the outer casing has a width of 15 mm. Any brickwork stretching across the outer casing must be self-supporting. Remember the screws between the outer casing and the wall.

Fire tubes and any convection ducts to other rooms should be fitted to the outer casing during the reconstruction.

The outer casing is not load-bearing. Therefore, fire tubes exceeding 2 m in length and, possibly, the chimney, must be secured (using hangers) thus avoiding putting any load on the outer casing.

Housing Construction, When Using An Existing Chimney Breast.

Whilst it is almost certain that the fabric of an existing fireplace and chimney will be non-combustible and will have a hearth which conforming to the regulations, it should be inspected to ensure that it has not been modified by an over zealous "do it yourselfer".

The depth and width of the fireplace should be measured to confirm there is sufficient room to fit the stove, before removing any brickwork. Many upper floor chimney breasts house not only the fire place but also the lower floor chimneys, and the depth is often much less than those of the ground floor.

Before removing any brickwork, the covering plaster should be removed so that any lintels can be identified. There will probably be two, the first supporting a few courses of bricks above the fire back opening and a second, higher up, which may be in the form of arched brickwork or a reinforced concrete lintel, which spreads the weight of the complete chimney structure onto the chimney breast side walls. Removing this lintel without adequate replacement support may result in a catastrophic collapse of a large area of brickwork. Remove no brickwork until the main supporting lintel is identified and is confirmed to be sound.

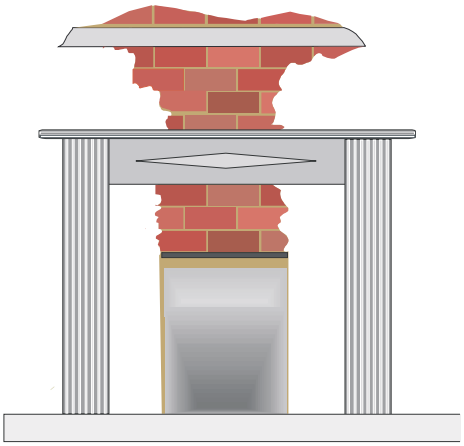

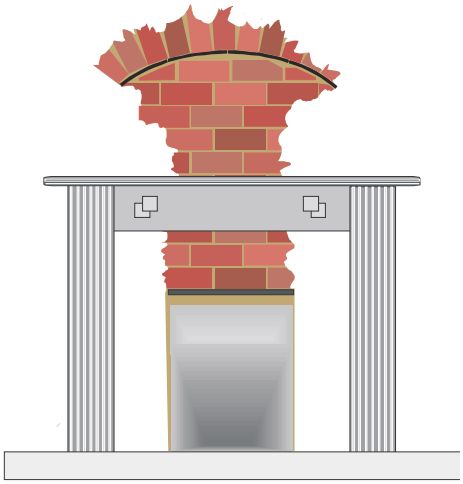

If the main supporting lintel is positioned high enough to accommodate the stove's housing to give the required stove position, with the extra height necessary if air ducts are to be fitted, the fire back, surround, bricks and lower lintel can be removed. If no upper lintel can be observed, its condition is doubtful or it is found to be too low, a qualified builder should be brought in to install a new lintel. This is not something to be attempted by anyone without specialist knowledge and experience.

With the fireplace opened to its full size the chimney should be inspected. If the property is very old the cross sectional area may permit you to instal hot air ducts at the top of the chimney breast or even to extend the hot air ducts to another floor easily, but as before no brickwork should be removed unless you are experienced and qualified to understand the implications of modifying supporting structures. To afford the easiest access it is advisable to fit the flue liner before in filling the fireplace. If the flexible liner is to be lowered from the top, it is advisable to lower enough flexible liner to allow the rigid to flexible adapter and rigid pipe to be fitted in relative comfort. Struggling with both arms fully extended into a black void, whilst holding a torch between you teeth is not the ideal way to ensure this joint is done perfectly which it needs to be if it is to be reliable.

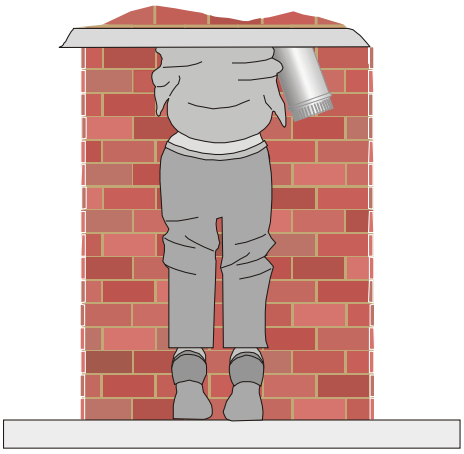

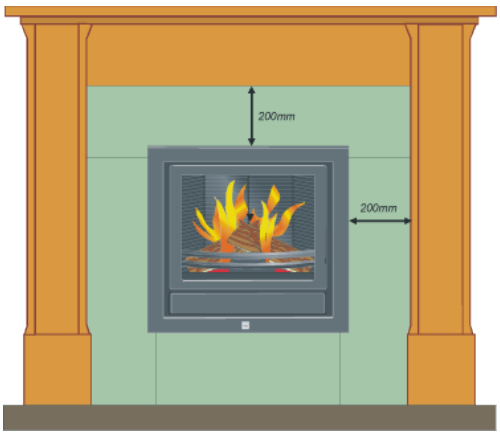

The stove's flue spigot is fitted to the flue pipe by pushing it upwards from within the stove so that the flue can be positioned exactly before in filling the fireplace to give the required housing size. A register, or closure, plate should now be fitted. This is a plate of metal or a proprietary non-combustible board made for this purpose, which closes all but a hole cut for the flue pipe of the chimney opening. Its purpose is primarily to prevent the inevitable debris, and especially lime mortar falling onto the stove top, which will cause corrosive damage to the stove top, but it also serves to position, exactly, the flue pipe in readiness for the stove. If air ducts are to be attached, holes in the register to accommodate these will need to be added. A secondary lintel will need to be fitted at the top of the opening into which the stove is to be fitted unless the existing lintel is at the top of the desired opening.

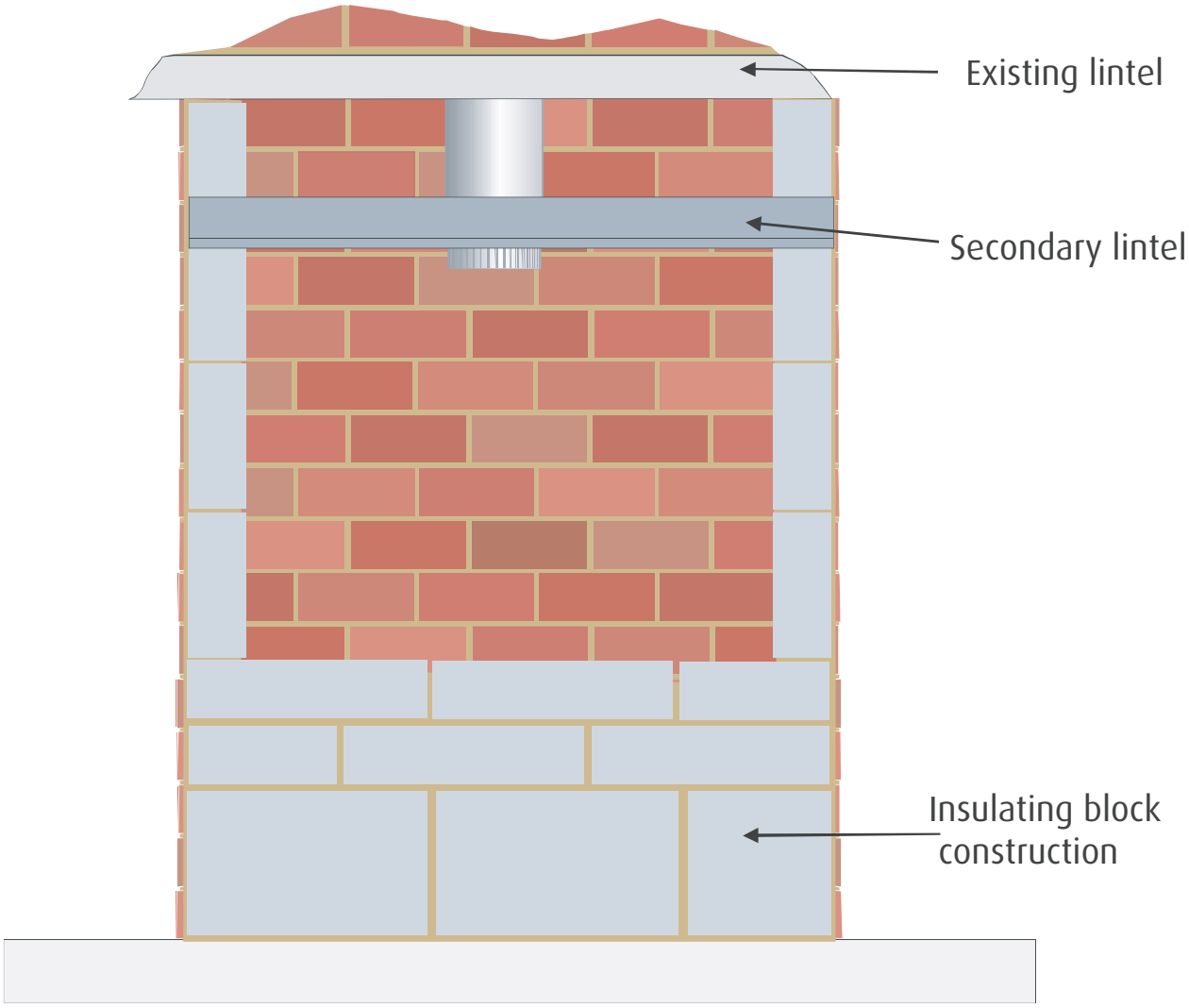

Before in filling the fireplace, consideration must be given to the heat generated by all the surfaces of the stove. If the face of the chimney breast is to be a smooth wall the heat surrounding the stove facia may be sufficient to crack ordinary plaster, especially if it has been applied recently. Heat resistant plasters are available.

The walls on top of the stove will become very hot and no combustible materials should be used as for any part of the in filling. Insulating blocks such as "Durarock" may be used to line the cavity if you need to keep the heat to the fireplace walls at a minimum to protect any pictures that may be hanging on them. Because the flow of rising hot air from the stove front can be considerable and constantly changing in temperature, no valuable pictures should be hung above the stove.

Housing construction, without an existing chimney breast.

If the property has no existing chimney or chimney breast the first consideration will be the positioning of the flue. Taking the flue to the roof internally through the property will involve complying with many regulations and even an external flue may be subject to planning regulations. Because there will be no existing structural hearth, this will need to be constructed following the strict Building Regulation requirements. For these reasons we cannot recommend that anyone without the necessary experience constructs the housing and flue system for a multifuel insert stove.

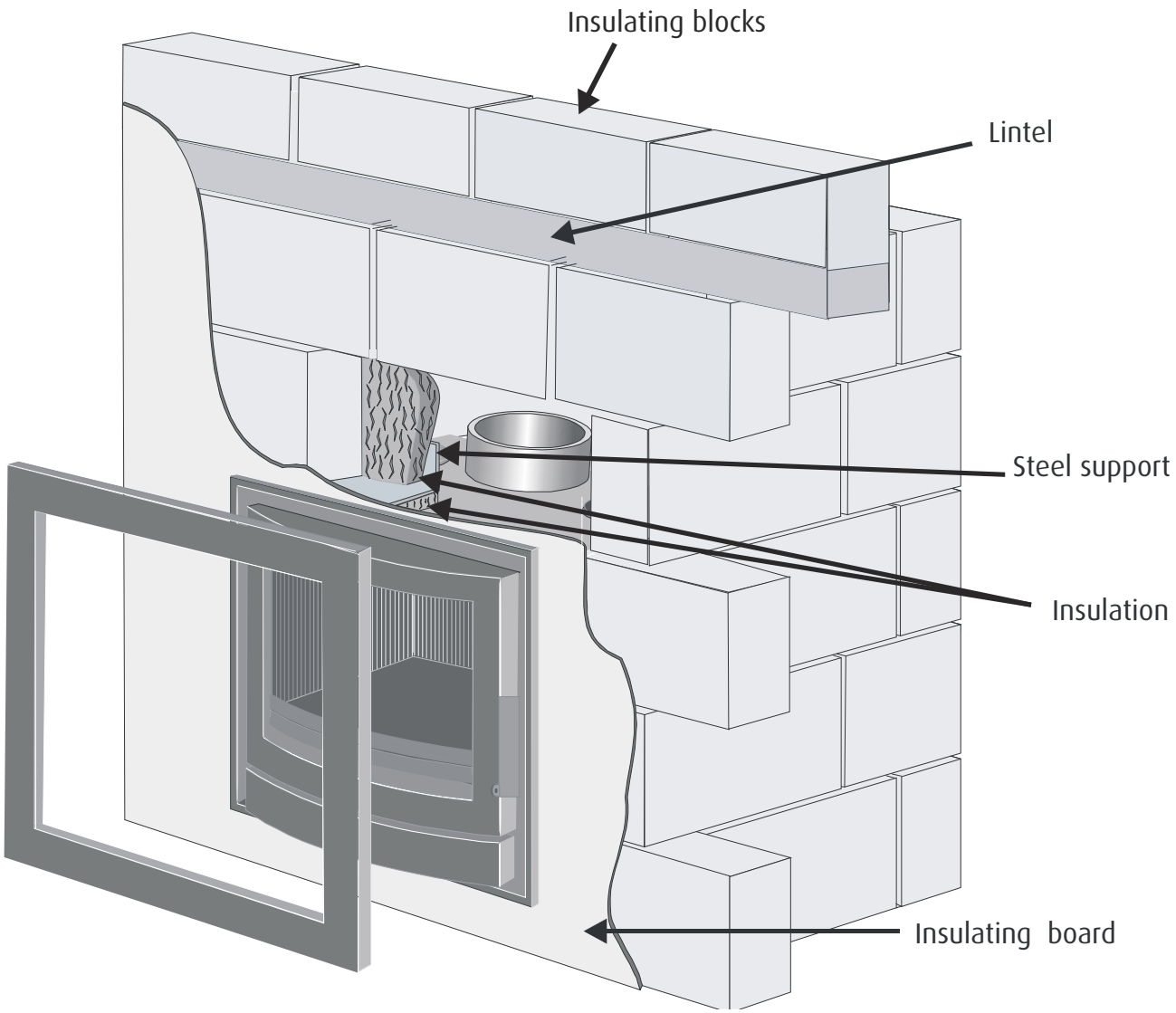

Because the temperatures reached by the stove's top and side panels may reach over three hundred degrees Celsius all materials used for constructing the housing must be both non-combustible, stable at high temperatures and insulate any part of the building which may be affected by heat. It should be born in mind that insulating materials only limit the rate of heat transference from the heated surface to the unheated surface and if the dispersal of heat from the unheated surface is less than the rate of heat transference the entire body of insulating material will reach an almost uniform temperature.

Ideal installation

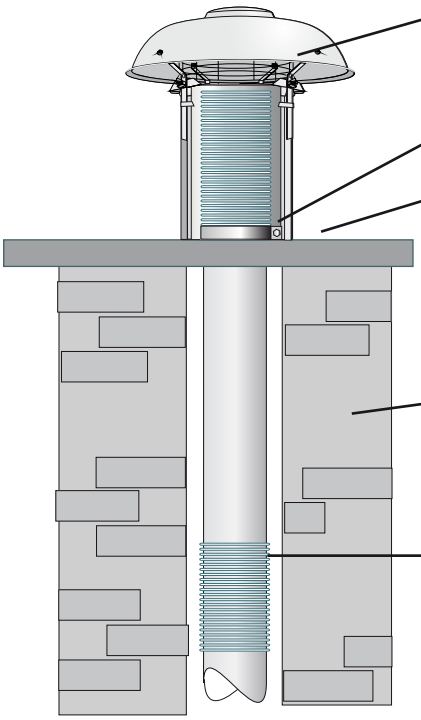

Cowl to prevent ingress of rain, birds and to assist with flue draught stabilization. It must be securely fiteed to a secure chimney pot.

Flue liner supporting collar.

Weatherproof chimney capping

Sound chimney brickwork

Stainless steel liner, to current British Standards, as suitable for the fuel type of the appliance.

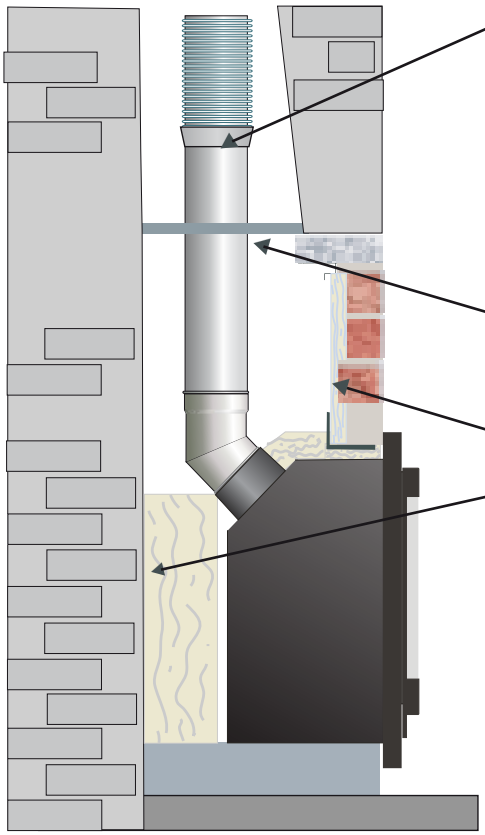

Although it is not a legal requirement we would always recomend fitting a ridged stainless flue for the first metre from the stove. It is esential that the correct rigid to flexible adapter is fitted.

Closure plate.

Insulation material enveloping the the housing.

Flue Draught Measurement

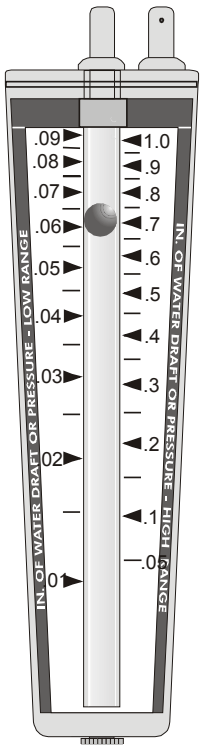

A flue draught which is too low will result in the stove being difficult to light, responding only slowly to demands for increased output and unable to reach its full heating output. If this is the case rectification work of the chimney construction should be under taken. A flue draught which is too high will cause difficult control conditions, and makes it possible to over fire the stove, which can seriously damage it. In this instance a flue draught stabiliser may need to be fitted or if it is wind assisted excessive flue draught a stabilizing cowl may need to be fitted.

The negative pressure created within the combustion chamber of the stove must be measured using a test hole drilled into the flue, as close to the stove as possible and before any draught stabilizer that may be fitted to the flue. To ensure a constant air inlet size the readings should be taken with the air inlet controls set at maximum.

Euroheat can supply the flue draught measurement gauges.
Order number MS026.

Note: this is not a water manometer used to measure gas pressure.

Automatic Combustion Control

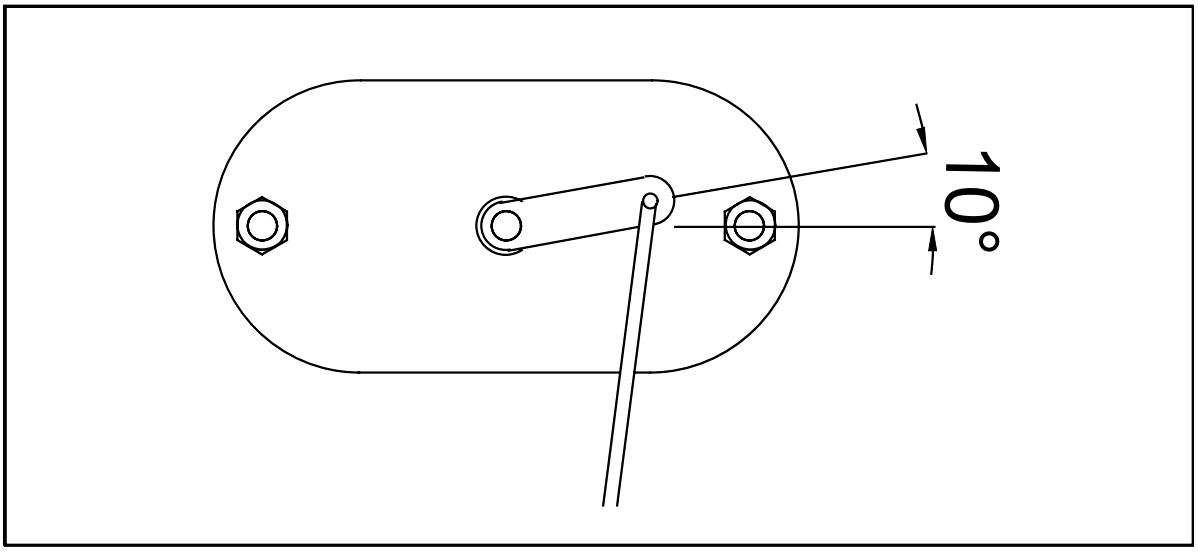

Remove stove insert from outer casing to reveal the operating arm.
On a cold stove the arm should be about 10° above horizontal.
The arm should move freely with only the resistance of the actuating bimetallic coil, and the damper plates should move freely, and be free of any dirt.
If lubrication is necessary apply a thin film of low viscosity oil such as WD40 or a PTFE lubricant such as Amberglide

Maintenance Instructions

Service inspection

Your stove should be given a thorough service inspection at least once a year. This includes:

- Thorough cleaning of the stove.
- Adjusting handles and door.
- Lubricating the hinges with copper grease.
- Replacing springs in the automatic combustion system, where necessary.
- Checking the automatic combustion system.
- Checking and/or replacing gaskets. Glass door gaskets must always be replaced.
- Checking and/or replacing mica board insulation material.
- Checking the construction.
- Checking the bottom and/or riddling grate.

Cleaning

Before sweeping, the regulator arm should be pushed fully to the left to prevent soot and ashes getting into the automatic combustion control.
The smoke shelf and smoke channelling plates should be removed from the stove before cleaning.

1. The combustion chamber's front mica board is removed.
2. The lower front mica board is removed.
3. The front side plates are removed.
4. The rear side plates are removed.
5. The mica board fire box top baffle is lifted out of the groove in the back plate and tilted to remove.
6. The lower secondary combustion baffle plate is removed. The baffle plate is loosened by removing the two tapered keys which secure the plate.
7. The upper secondary combustion baffle plate is lifted out (the rear is tilted upward).

Automatic Combustion Control

Remove stove insert from outer casing.
On a cold stove, the starting point of the mechanism is controlled. The starting point on a cold stove is about 10° above horizontal.
It should move easily and spring loaded when you push it, no matter if the stove is cold or hot.
With a rising or falling temperatures it should move gradually.
The damper plates must be dry and clean and slide together unhindered.
Control bars and slide gates may have to be lubricated with a proprietary lubricant such as WD40 or a PTFE based product such as Amberglide .

Insulation (Skamolex)

The mica board insulation material of the combustion chamber may, in time, become worn and damaged. Cracks in the insulation have no effect on the efficiency of the stove. The insulation should be replaced, however, when it is reduced to less than half the original thickness due to wear and tear.

Commissioning Check List

X Mark box when completed

Inspect the door and glass seals and ensure all handle latches are adjusted correctly, procedure in the operating instructions.

☐

Check baffles are installed correctly and that the riddling mechanism is operating correctly.

☐

Ensure that the fire responds to the operation of the controls and that there are no visible emissions of the combustion products into the room.

☐

Check the flue draught is within the parameters within these instructions. If the draught is excessive fit a suitable flue stabiliser. If they are below the requirements, rectify whatever problem exists with the flue installation.

☐

Instruct the user on the use of the tools, operation of the appliance and the summer shut down procedure. Information in the operating instructions.

☐

Instruct the user never to operate the stove with the furnace door open and that the user is aware of the requirement of a suitable fire guard where children, the old or infirm may come into contact with the appliance.

☐

Hand over the installation instructions, operating instructions and completed warranty form to the user. Remind the owner to return the warranty form for registration.

☐

Complete the Stoves Registration Form and Pass to User for Registration

Euroheat and Hwam have a policy of continual research and development and reserve the right to modify its appliances without prior notice.
We make every effort to ensure that the information provided in this document is correct and accurate at the time of printing. Continued updates occur to adapt documents to customer requirements and appliance changes. For the latest editions of all Euroheat documentation visit our web site:
www.euroheat.co.uk.
We would request that you inform Euroheat of information which you feel is not provided in this document which would assist other users in the future.